TM0550 50Ω 5W DC~52GHz

2.4mm High Performance 50Ohm Stainless Steel Terminator

Ver A/0 Release Date March, 2018 P/N:TM0550

Features

- DC~52GHz Frequency Range
- Max Power 6W
- VSWR < 1.45 < 1.30 < 1.20 < 1.14
  C-Class B-Class A-Class S-Class
- Miniature Size
- 2.4mm Interfaces

Applications

- Wireless
- Radar System
- Commercial and Military
- Test and Measurement
- Communication
- Satcom

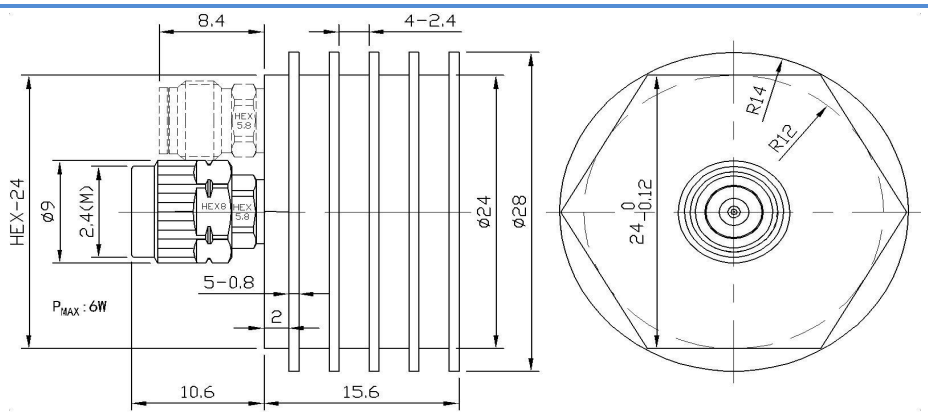

Mechanical & Environmental Specifications

Outer Conductor	Coupling Nut	Passivated Stainless Steel	Temp. Range	Storage	-55℃~125℃
	Body	Black Anodized Aluminum Heatsink		Working Temp.	-55℃~100℃
Inner Conductor	Male	Beryllium Copper Gold plated(≥1.27μ m)	Altitude	Storage	< 15300 Meters
	Female	Beryllium Copper Gold plated(≥1.27μ m)		Working Temp.	< 4800 Meters
Weight		25 g			

Electrical Specifications

Model	Frequency Range(GHz)	VSWR(:1)	Return Loss(dB)
TM0550-C	DC~50GHz	< 1.45	-14.7
TM0550-B	DC~50GHz	< 1.30	-17.7
TM0550-A	DC~50GHz	< 1.20	-20.8
TM0550-S	DC~50GHz	< 1.14	-23.7

C,B,A,S are performance level.Max frequency is 52.5GHz.Average power:Max power 5W corresponding ambient temp. is 25℃,Power derates linearly to 0.5W when temperature is up to 100℃.Peak power: Max power 100W (Maximum 5 μ s pulse, maximum 2% duty cycle)

Remark:a.dimension mm, tol.±1%. b.100% test. c.Customized according to customer requestments

Shenzhen RFcoms Technology Co.,LTD Tell: +86 13480725660

Website: www.rfcoms.com Email: luke@rfcoms.com

The rights of technical information provided on this sheet belongs to RFcoms. Contents cannot be distributed to other third-party companies without permission. The specifications are subjected to change without prior notice