AT1540 50Ω 15W 3~40dB DC~42GHz

2.92mm High Performance 50Ohm Stainless Steel Attenuator

Ver A/0 Release Date March, 2018 P/N:AT1540

Features

- DC~42GHz Frequency Range
- Max Power 16W
- VSWR < 1.38 < 1.26 < 1.18 < 1.12
  C-Class B-Class A-Class S-Class
- Miniature Size
- 2.92mm Interfaces

Applications

- Instrumentation
- Precision measurements
- Prototyping and characterization
- Production systems

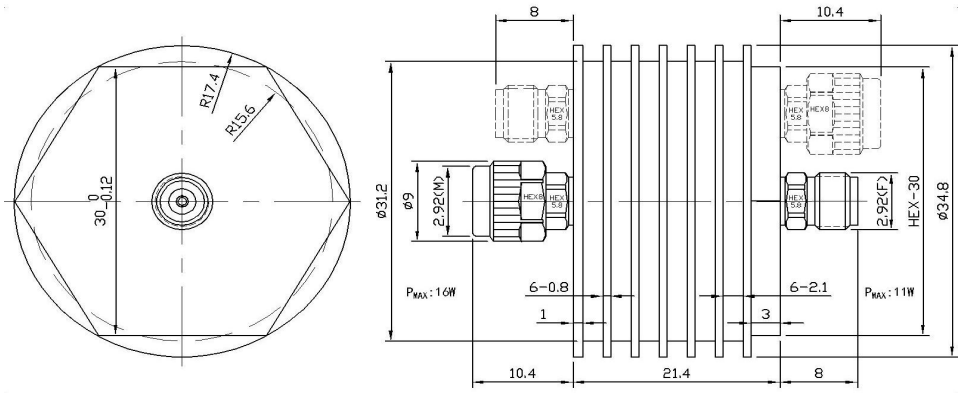

Mechanical & Environmental Specifications

Outer Conductor	Coupling Nut	Passivated Stainless Steel	Temp. Range	Storage	-55℃~125℃
	Radiator	Black Anodized Aluminum Heatsink		Working Temp.	-55℃~100℃
Inner Conductor	Male	Beryllium Copper Gold plated(≥1.27μ m)	Altitude	Storage	< 15300 Meters
	Female	Beryllium Copper Gold plated(≥1.27μ m)		Working Temp.	< 4800 Meters
Weight		55 g			

Electrical Specifications

Model	Frequency Range(GHz)	Attenuation(dBc) and accuracy				Return Loss(dB)
		3~10	20	30	40	
AT1540C-XX	DC~40GHz	-1.5/+1.8	-1.0/+1.2	-1.0/+1.2	-1.0/+1.2	-15.9
AT1540B-XX	DC~40GHz	-1.2/+1.5	-1.0/+1.0	-1.0/+1.0	-1.0/+1.0	-18.8
AT1540A-XX	DC~40GHz	-1.0/+1.2	-0.8/+1.0	-0.8/+1.0	-0.8/+1.0	-21.7
AT1540S-XX	DC~40GHz	-1.0/+1.0	-0.8/+0.8	-0.8/+0.8	-0.8/+0.8	-24.9

XX refers to decrease value,C,B,A,S are average power of performance level.

Average power: The ambient temperature corresponding to bidirectional at 15W input and 10W output is 25 ℃

When temperature is up to 100℃.The power decreases linearly to 1.5W or 1W

Peak power: Max power 200W (Maximum 5 μ s pulse width, maximum 4% or 3% duty cycle)

Working time: no air cooling, ≤ 5 minutes; with air cooling, air volume ≥ 8CFM, long-term work

Remark

1、All physical dimensions are in mm and the tolerance is ± 1%

2、The network analyzer tests in the whole frequency band, 100% electrical performance test.

3、Special connectors and special attenuation can be customized according to customer requirements

Shenzhen RFcoms Technology Co.,LTD Tell: +86 13480725660

Website: www.rfcoms.com Email: luke@rfcoms.com

The rights of technical information provided on this sheet belongs to RFcoms. Contents cannot be distributed to other third-party companies without permission. The specifications are subjected to change without prior notice